F 103 WP

Turbines, Inc.™

Your success counts

Weatherproof Flow Logger / Totalizer

for liquid and gas flow applications







Application examples: *Hot and sandy deserts*



Flow logging at harsh conditions



Water and chemical flow monitoring at oil wells

The versatile F103 Flow Totalizer is your best choice for flow monitoring applications. It is perfect for new installations and to replace existing flow analyzers in the field. Its rugged construction, unique plug-and-play design and attractive pricing makes the F103 the perfect flow logger for liquid and gas flow measurement in Class I, Division 2 hazardous areas.

Advantages

- CSA Class I, Division 2, Non-Incendive rating for the United States and Canada.
- Intuitive “Know one, know them all!” configuration menu with quick setup function, saving time, cost and aggravation.
- Easy configurable via PC with free downloadable Configuration Software.
- Excellent pricing and fast delivery times.

Features

- Displays simultaneous linearized flow rate and total, as well as accumulated total, daily total and 15 previous day totals.
- Flow logging to survey daily operation and unexpected events with 600 daily, 1500 interval and 724 event logs (optional).
- Large display with 0.7” numeric and 0.3” alphanumeric digits.
- Quick set-up for easy configuration of the most used settings.
- Smart K-factor configuration for volumetric or mass flow.
- 15 linearization points for high accuracy at the full flow range.
- Auto backup of settings and running totals.
- Digital scaled, unscaled and “isolated solid state” outputs.
- Isolated, loop powered 4 - 20mA output.
- Modbus RS485 / RS232 communication.
- Ability to process all types of signals: Sine wave (coil), NPN /PNP pulse, Reed-switch and Isolated active pulse signals.
- Power requirements: long life lithium battery, 6 - 30V DC or loop powered analog 4 - 20mA output.

Introduction

The F103 is the promising member in our range of F-Series flow rate / totalizers. It is the first F-Series with flow logging besides the various pulse and analog output signals. Even demanding applications are catered for with our base unit configuration.

Display

The display has large 17mm (0.67") and 8mm (0.31") digits which can be set to show flow rate and totals. A current day total (daily total) and 15 historical (previous) day totals can be enabled in the setup menu to be shown at the main display. On-screen engineering units can easily be configured from a comprehensive menu. The accumulated total can register up to 11 digits and is backed-up in EEPROM memory every minute. For those applications where readability during day and night is required, a white backlight is available.

Configuration

All configuration settings are accessed via a user-friendly operator menu which can be password protected. A quick setup function allows fast entry to the most often used settings from the full setup menu. All settings are clearly indicated with an alphanumerical description, which avoids confusing abbreviations and baffling codes. Once familiar with one F-series product, you will be able to program all models in the series without a manual. All settings are safely stored in EEPROM memory in the event of sudden power failure.

Communication

All process data and settings can be read and modified manually or through the Modbus RS485/RS232 communication link. Data log files are easy accessible and downloadable as .csv file via the communication link with the free software tool.



Power requirements

As standard, a basic 6 - 30V DC can power the F103 and bright backlight, the isolated, two-wire, analog output can only power the F103. A long life lithium battery is optional available. An 8.2 / 12 / 24V DC sensor supply is available with option type PD.

Analog output

The linearized flow rate is transmitted with the galvanically isolated 4-20mA output. The F103 can be powered via the loop-current.

Digital output

The F103 has 3 digital outputs: an unscaled pulse output, retransmitting the incoming pulse input as robust square wave forms. A scaled pulse output and an isolated (solid state), scaled pulse output, both reflecting the count of the accumulated total.

Hazardous areas

The F103 is approved by CSA with a Class I, Div. 2, Non-Incendive rating for the United States and Canada, with an allowed ambient temperature of -40°C to +70°C (-40°F to +158°F).

Remote configuration

Quick and easy configuration via a PC connection using the free downloadable Configuration Software. Just connect the F103 to your PC with the available configuration cables.

Data logging

The flow/data logging is optional available and when chosen, it replaces the basic 15 historical (previous) day totals. Each log contains the flow rate, total, acc. total, time stamp and log number. The log can be downloaded as .csv file with the free software tool.

Overview application F103

The versatile F103 Weatherproof Flow Totalizer is your best choice for flow monitoring applications. It is perfect for new installations and to replace existing flow analyzers in the field. Its rugged construction, unique plug-and-play design and attractive pricing makes the F103 the perfect flow logger for liquid and gas flow measurement in Class I, Division 2 hazardous areas. Application example: Liquid flow measurement where re-transmission of the flow rate and/or totalizer functions or serial communication is required.
Alternative products: Intrinsically Safe F-Series F018 / F110 or the explosion proof E-Series E018 / E110.

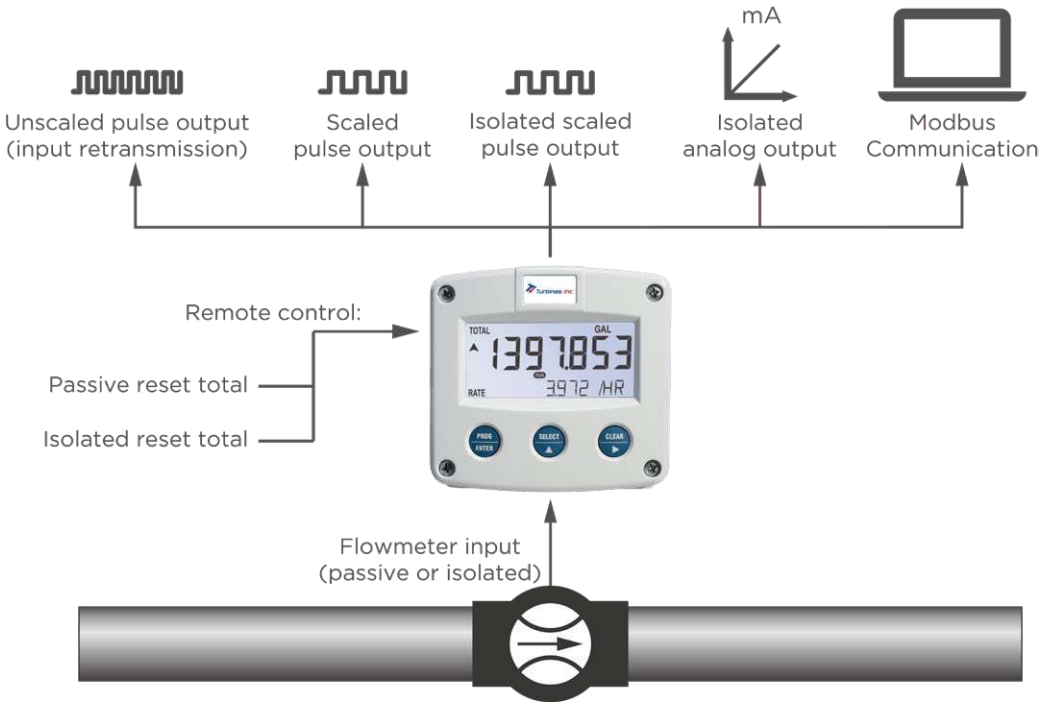

Signal input

The F103 accepts most pulse input signals from volumetric or mass flowmeters. The input signal type can be selected by the user in the configuration menu without having to adjust any sensitive mechanical dip-switches or jumpers. The F103 has an easy K-factor and engineering unit configuration for volumetric or mass flow measurement. The smart K-factor conversion simplyfies your setup, avoiding the manual calculation and entering of 2 different K-factors for the (accumulated) Total and Flow rate.

Type of signal	Resistance	Low Pass filter (LP)	Max. frequency	Max. frequency Low Pass filter (LP)	Min. amplitude P-P	Remark
NPN	100kΩ pull-up	100kΩ pull-up	6kHz Threshold 1.2V	2.2kHz		Open collector LP = less sensitive
REED	1MΩ pull-up	1MΩ pull-up	1.2kHz Threshold 1.2V	120Hz		LP = less sensitive
PNP	51KΩ pull-down	51KΩ pull-down	6kHz Threshold 1.2V	700Hz		LP = less sensitive
COIL-HI	-	-	-	-	$20mV_{pp}$	Sensitive for interference!
COIL LO	-	-	-	-	$80mV_{pp}$	Default sensitivity
ISOLATED ACTIVE	4.7kΩ	-	3.5kHz Threshold 3V			Active pulses 3 - 30V

Enclosures

Various types of enclosures can be selected, all are CSA approved. As standard the F103 is supplied in a GRP field enclosure with earthing plate, suitable for 1/2" conduit hub entries. The IP67 / Type 4X GRP field mount enclosure has an excellent heat and chemical resistance. For challenging conditions, we advice our robust aluminum field mount enclosure which is also available with an extended backcover with undrilled preparation for direct meter mounting at the back side. It is so rugged, even a truck can stand on it! For the most challenging environments we have a durable high grade Stainless steel 316L enclosure. All enclosures have EU or U.S. cable gland entry threads available.

Cable entries

Aluminum / Stainless Steel

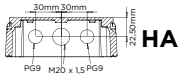

GRP

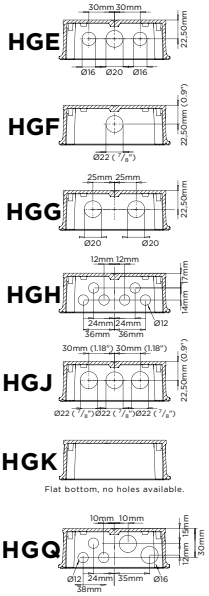

GRP with Conduit Hub entries

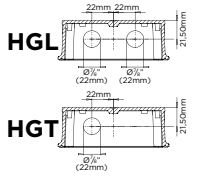

Extended Aluminum

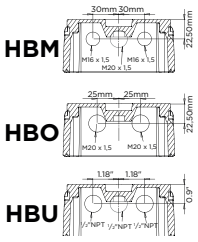

Panelmount enclosures

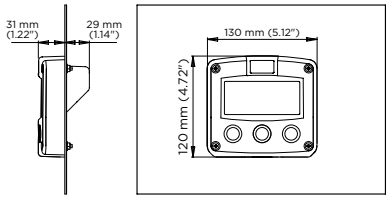

HB & HGC enclosures

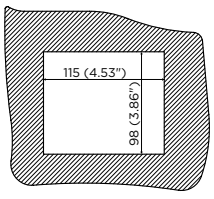

panel cut-out

Dimensions enclosures

Aluminum, GRP & Stainless steel 316L field mount enclosures

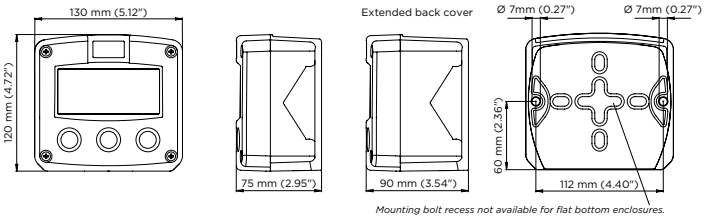

Mounting bolt recess not available for flat bottom enclosures.

Example: HGL enclosure, earting plate & conduit hub

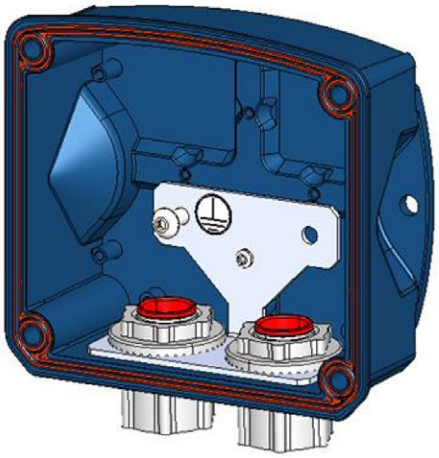

Terminal connections

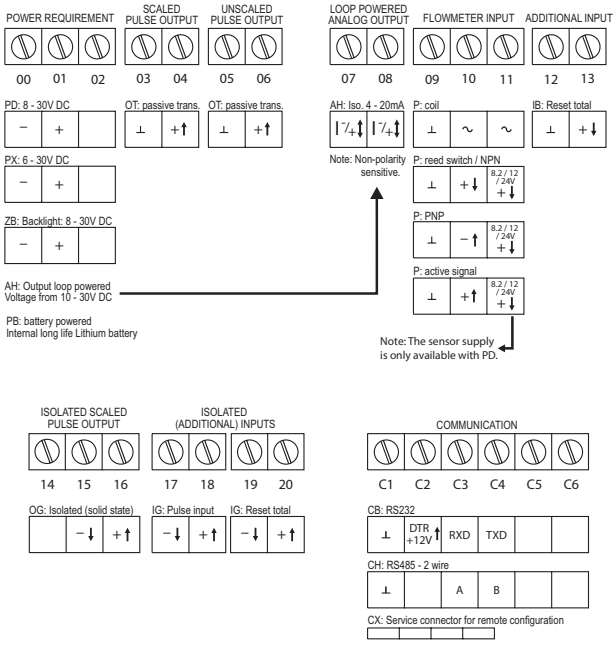

Configuration example F103-P-AH-CH-IB-IG-OG-PX-XN-ZX

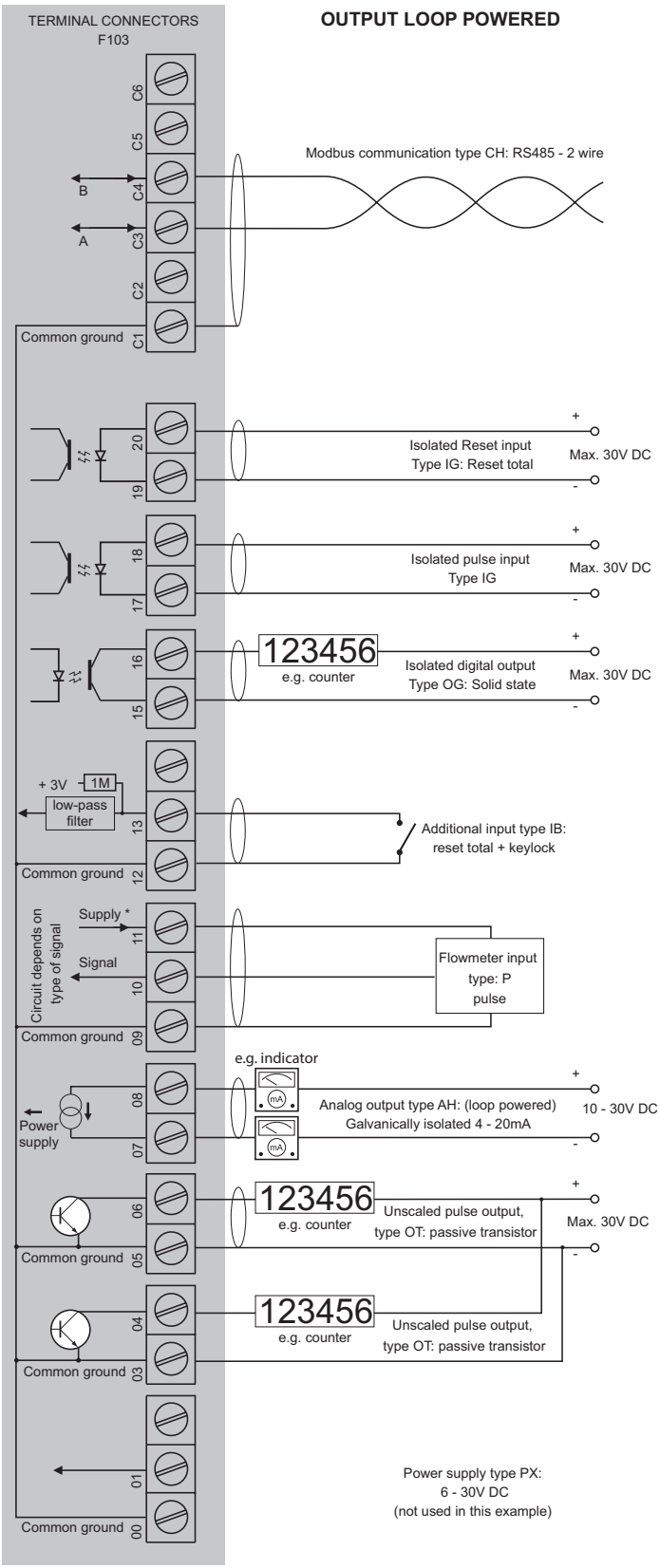

* For pulse type inputs: V_{ref}: 1.2V/3.0V available.- NO power output, available I_{supply}: <1mA.
Note: using these ref. voltages at max. load, will reduce battery life significantly.

Configuration example F103-P-AH-CX-IB-OT-PB-PX-XN-ZX

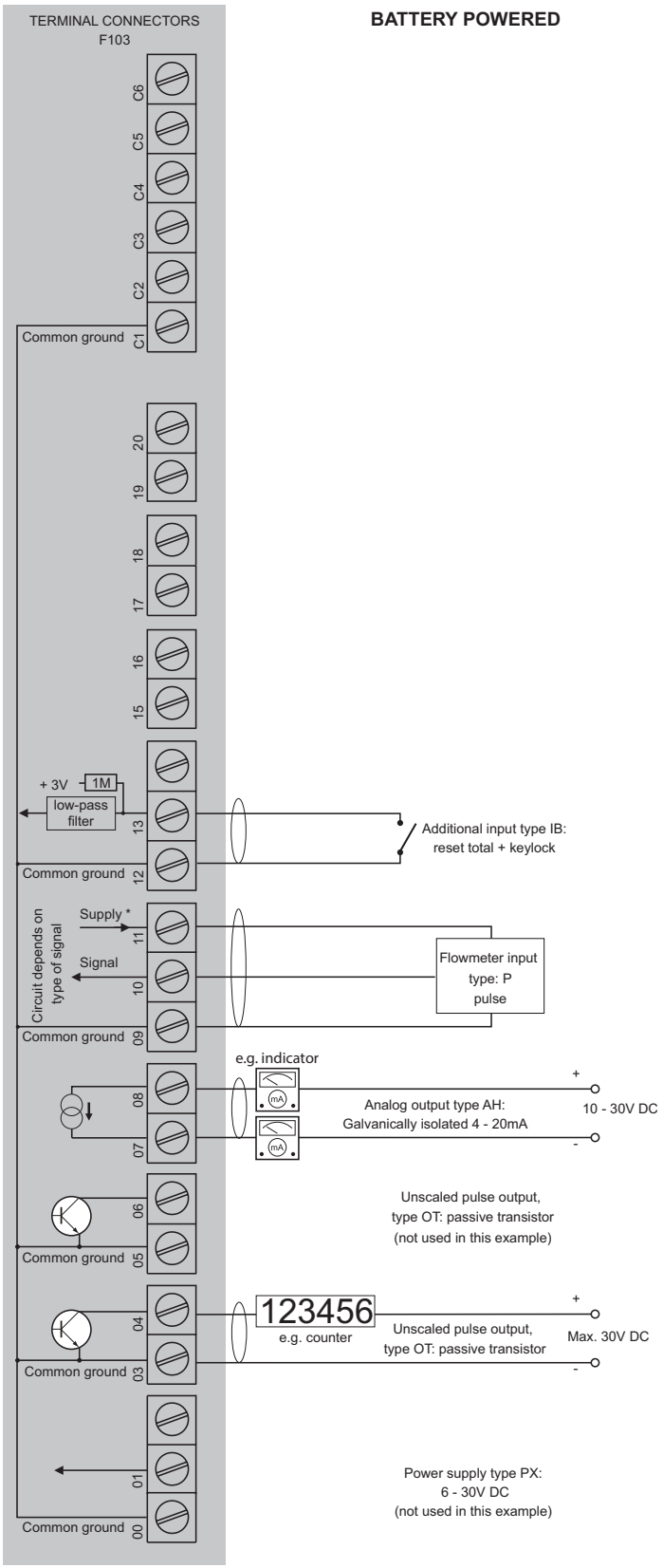

* For pulse type inputs: V_{ref}: 1.2V/3.0V available.- NO power output, available I_{supply}: <1mA.
Note: using these ref. voltages at max. load, will reduce battery life significantly.

Control drawing F1xx-XN

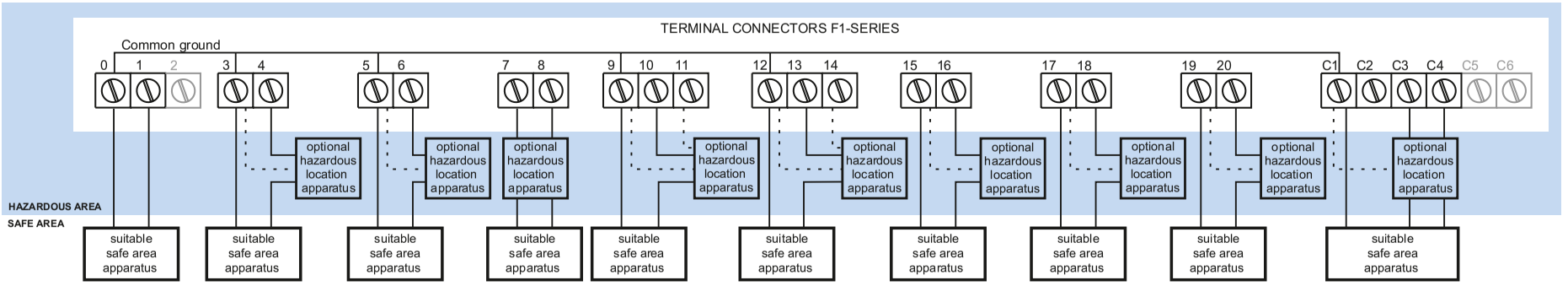

Terminals		0, 1	3, 4	5, 6	7, 8	9, 10, 11	12, 13, 14	15, 16	17, 18	19, 20	C1, C2, C3, C4
	Function	Power Supply	Digital Output 2	Digital Output 1	Analog Output	Sensor 1	Sensor 2	Digital Output 3	Sensor 3	Sensor 4	Communication
	Isolated	-	-	-	Yes	-	-	Yes	Yes	Yes	-
Input:	**Vin-max**	30V dc	30V dc	30V dc	30V dc	10V dc or peak	10V dc or peak	30V dc	30V dc	30V dc	-7 dc to 12V dc
	Iin-max	0.5A (fused)	300mA	300mA	-	-	-	60mA	-	-	-
Output:	**Voc**					5.1V dc	5.1V dc				
	Isc					1.9mA	1.9mA				
	Po					2.4mW	2.4mW				
	Ca					1000µF	1000µF				
	La					3H	3H				

Note 1: Greyed-out terminal mean 'no connection' and should not be connected to any circuit.

Note 2: Isolated means isolated from internal circuitry and circuits connected to GND.

Note 3: All circuits can have optional hazardous location apparatus installed. Verify suitability with above I/O parameters and I/O parameters of the circuits and optional apparatuses.

Note 4: In case this instrument is connected to a supply by means of a permanent connection a switch or circuit-breaker shall be included in the installation.
This shall be in close proximity to the equipment and within easy reach of the operator. It shall be marked as the disconnecting device for the equipment.
Furthermore, a protective over-current device with a maximum rating of 0.5A (e.g. fuse or circuit breaker) must be inserted in the positive supply line in safe area.
The external power supply must be an approved ELV source, insulated from AC mains by double / reinforced insulation per CSA C22.2 No. 61010-1-12 / UL61010-1.

Note 5: The installation must comply with (inter)national requirements and local ordinances.
Within the United States all field wiring (for Class I, Div. 2) must conform to Article 501.10(B) of the National Electric Code, NFPA 70.
Within Canada all field wiring must conform to Section J18-064 (for non-incendive field wiring) or J18-152 (for Class I, Div. 2 wiring) of the Canadian Electrical Code for installations within Canada.

Control drawing: D_F1xx **Revision: 1.0** **Control drawing number: D_F1xx_1.0** **Date: July 14th, 2020**

Display

Type	High intensity reflective numeric and alphanumeric LCD, UV-resistant.
Dimensions	90 x 40mm (3.5" x 1.6").
Digits	Seven 17mm (0.67") and eleven 8mm (0.31") digits. Various symbols and measuring units.
Refresh rate	User definable: fast, 1sec , 3sec, 15sec, 30sec, off.
Option ZB	Transflective LCD with optional bright LED-backlight. Intensitiy can be adjusted in the configuration menu. Improved readability in full sunlight and darkness.

Ambient temperature

Safe areas	-40°C to +70°C (-40°F to +158°F).
Non-Incendive	-40°C to +70°C (-40°F to +158°F).

Terminal connections

Type	Removable plug-in terminal strip. Wire max. 1.5mm^2.

Data protection

Type	EEPROM backup of all settings. Backup of running totals every minute. Data retention at least 10 years.
Password	Configuration settings can be password protected.

Directives & Standards

EMC	EN 61326-1; FCC 47 CFR part 15
Low voltage	CSA/UL/IEC 61010-1
RoHS	EN 50581
CSA	CSA C22.2 No.213-17, UL 121201
IP & NEMA	CSA C22.2 No. 94.2-15; UL 50E

Non-Incendive (Type XN)

CSA	Class I, Division 2, Groups A, B, C, D T5.
Ambient Ta	-40°C to +70°C (-40°F to +158°F).

Enclosure

Window	Polycarbonate window.
Sealing	Silicone.
Control keys	Three industrial micro-switch keys. UV-resistant silicone keypad.

Panel mount enclosures

Dimensions	130 x 120 x 60mm (5.12"x4.72"x2.36") - W x H x D.
Panel cut-out	115 x 98mm (4.53" x 3.86") L x H.
Type HB	Die-cast aluminum panel mount enclosure IP65 / NEMA Type4X.
Weight	600 gr.
Type HGC	GRP panel mount enclosure IP65/NEMA Type4X, UV-resistant and flame retardant.
Weight	450 gr.
Type HSB	Die-cast stainless steel 316L IP67/NEMA Type4X.
Weight	1150gr.
Note	Only available for safe areas, type XX.

GRP wall / field mount enclosures

General	GRP wall/field mount enclosure IP67 / Type 4X, UV-resistant and flame retardant.
Dimensions	130 x 120 x 75mm (5.12" x 4.72" x 2.95") - W x H x D.
Weight	600 gr.
Type HGD	Cable entry: no holes.
Type HGE	Cable entry: 2 x Ø 16mm and 1 x Ø 20mm.
Type HGF	Cable entry: 1 x Ø 22mm (⅞").
Type HGG	Cable entry: 2 x Ø 20mm.
Type HGH	Cable entry: 6 x Ø 12mm.
Type HGJ	Cable entry: 3 x Ø 22mm (⅞").
Type HGK	Flat bottom, cable entry: no holes - requires XX.
Type HGQ	Cable entry: 2 x Ø 16mm & 3 x Ø 12mm.
Type HGL	2 x ½" conduit hub entries with earthing plate.
Type HGT	1 x ½" conduit hub entry with earthing plate.
Note HGL/HGT	Only available for Class I, Division 2, type XN.

Aluminum wall / field mount enclosures

General	Die-cast aluminum wall/field mount enclosure IP67 / Type 4X with 2-component UV-resistant coating. Extended back cover available with undrilled preparation for direct meter mounting.
Dimensions H_	130 x 120 x 75mm (5.12" x 4.72" x 2.95") - W x H x D.
HB_	130 x 120 x 90mm (5.12" x 4.72" x 3.54") - W x H x D.
Weight	1100 gr. / extended enclosure: 1310 gr.
Type HA	Cable entry: 2 x PG9 and 1 x M20.
Type HL	Cable entry: 2 x ½" NPT.
Type HM/HBM	Cable entry: 2 x M16 and 1 x M20.
Type HN	Cable entry: 1 x M20.
Type HO/HBO	Cable entry: 2 x M20.
Type HP	Cable entry: 6 x M12.
Type HT	Cable entry: 1 x ½" NPT.
Type HU/HBU	Cable entry: 3 x ½" NPT.
Type HV	Cable entry: 4 x M20.
Type HZ	Cable entry: no holes.

Stainless steel 316L wall / field mount enclosures

General	Die-cast stainless steel 316L wall / field mount enclosure with flat bottom. IP67 / Type 4X.
Dimensions	130 x 120 x 75mm (5.12" x 4.72" x 2.95") - W x H x D.
Weight	2700 gr.
Type HSM	Cable entry: 2 x M16 + 1 x M20.
Type HSO	Cable entry: 2 x M20.
Type HSU	Cable entry: 3 x ½"NPT.

Signal inputs - Flowmeter

Type P	Non-isolated: Coil / sine wave (HI: 20mVpp or LO: 80mVpp - sensitivity selectable), NPN/PNP, open collector, reed switch.
Type IG	Active isolated pulse input: 3 - 30V DC Type IG requires type OG.
Frequency	Minimum 0Hz - maximum 7kHz for total and flow rate. Maximum frequency depends on signal type and internal low-pass filter. E.g. reed switch with low-pass filter: max. frequency 120Hz.
K-Factor	0.000010 - 9,999,999 with variable decimal position.
Low-pass filter	npn-lp; reed-lp; pnp-lp.
Linearization	15 positions with interpolation function; Meter-Factor 0.000001 - 9.999999 versus Frequency 0.001Hz - 9,999Hz.

Signal inputs - Additional input

Type IB	• Terminal input to reset total remotely; • If this terminal input is closed, the "clear total"-function is disabled; Non-isolated; Internally pulled-up switch contact - NPN. Minimum pulse duration 200 msec.
Type IG	• Isolated remote control input to reset total; Active (3-30V DC) minimum pulse duration 3sec.
Note IG	Type IG requires type OG.

Daily total display examples



Daily total

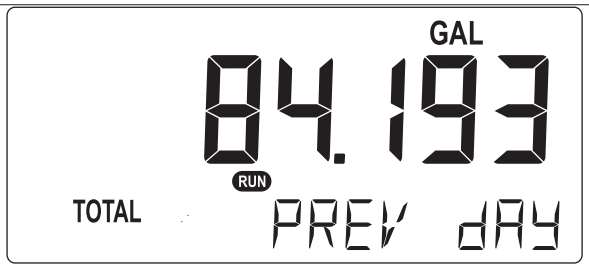

Previous daily total



Historical day total

Signal outputs - Digital output

Function	• Scaled output (D2 & D3) - transmitting accumulated total. • Unscaled output (D1) - pulse input retransmission.
Frequency	• Unscaled (D1): Minimum pulse duration: 50µs, square wave output based on frequency of (sine wave or coil) input signal. • Scaled (D2): max. 500Hz. Pulse length user definable between 1msec up to 10 seconds. • Scaled (isolated D3): max. 50Hz. Pulse length user definable between 10msec up to 10 seconds.
Type OG	• Two passive transistor outputs (Type OT), load max. 30V DC – 300mA and • One isolated passive solid state output, load max. 30V DC – 60mA. Type OG requires type IG.
Type OT	• Two passive transistor outputs, load max. 30V DC – 300mA .

Signal outputs - Analog output

Function	Transmitting linearized flow rate.
Accuracy	12 bit. Error 0.03% @ 20°C (Typical 45ppm/°C). Output signal can be scaled to any desired range.
Update time	Ten times per second.
Supply voltage	10V (lift-off voltage) - 30V DC
Max. load	700 Ohm @ 24V.
Type AH	Passive galvanic isolated output - output loop powered.

Signal outputs - Communication option

Function	Reading display information, reading / writing all configuration settings.
Protocol	Modbus ASCII / RTU.
Speed	1200 - 2400 - 4800 - 9600 - 19200 - 38400.
Addressing	1 - 247.
Type CB	RS232
Type CH	RS485 2-wire
Type CX	Service connector – temporary use in non-hazardous area, e.g. for remote configuration. Requires communication cable (ACE02).

Power requirements

Type AH	Loop powered, analog output. 10 - 30V DC, Min. 3.5mA. Max. load: 700 Ohm @ 24V.
Type PB	Long life Lithium battery - life-time depends upon settings and configuration - up to 5 years.
Type PD	8 - 30V DC. Power consumption max. 3W. Type PD is only available for safe areas, type XX.
Type PX	6 - 30V DC. Power consumption max. 0.4W.
Type PX-ZB	8 - 30V DC. Power consumption max. 1.0W.
Note AH	The loop powered analog output cannot power the backlight.
Note PB	The battery cannot power the backlight.

Sensor excitation

Type PB/PX	3V DC for pulse signals and 1.2V DC for coil pick-up.
Note PB/PX	This is not a real sensor supply. Only suitable for sensors with a very low power consumption like coils (sine wave) and reed-switches.
Type PD T_a max. +60°C	With T_a: -40°C to +60°C (-40°F to +140°F). 8.2V DC, Iout max. 10mA. 12V DC, Iout max. 10mA. 24V DC, Iout max. 75mA (this voltage varies depending on the input supply voltage).
Type PD T_a max. +50°C	With T_a: -40°C to +50°C (-40°F to +122°F). 8.2V DC, Iout max. 20mA. 12V DC, Iout max. 20mA. 24V DC, Iout max. 75mA (this voltage varies depending on the input supply voltage)
Note PD	Type PD is only available for safe areas, type XX.

Remote configuration

Function	Easy remote configuration via our free software and a communication cable.
Type CB	Requires ACE07 cable with RS232 to USB plug.
Type CH	Requires ACE06 cable with RS485 to USB plug.
Type CX	Requires ACE02 cable for option CX to USB plug.

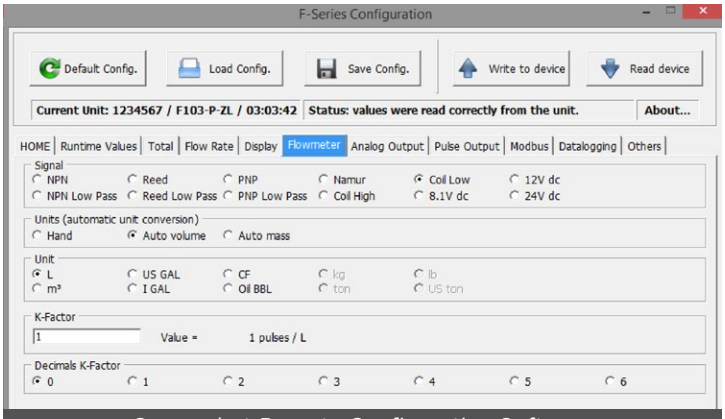

Screenshot Remote Configuration Software

Operator functions

Displayed info	• Linearized flow rate and / or total. • Total and accumulated total. • Current day (daily) total and 15 previous day totals • Total can be reset to zero by pressing the CLEAR-key twice. • Advanced flow logging with option Type ZL.

Total

Digits	7 digits.
Units	L, m^3, US gal, igal, cf, Oil bbl, kg, ton, US ton, lb, nL, nm^3 or no unit.
Decimals	0 - 1 - 2 or 3.
Note	Total can be reset to zero.

Accumulated total

Digits	11 digits.
Units / decimals	According to selection for total.
Note	Cannot be reset to zero.

Flow rate

Digits	7 digits.
Units	mL, L, m^3, mg, g, kg, ton, US ton, US gal, igal, Oil bbl, lb, cf, rev, none, scf, nm^3, nL or p.
Decimals	0 - 1 - 2 or 3.
Time units	/sec - /min - /hr - /day.

Daily totals

Digits	7 digits.
Units / decimals	According to selection for total.
Contract hour	0:00 – 23:00, settable per whole hour.
Current day total	Running total, started at zero after the last contract hour.
Prev. day total	Fixed total, copied from current day total at the last contract hour.
Hist. day totals	The last 15 previous day totals are stored and can be reviewed on the display (without ZL).
Note	Current day total cannot be reset to zero.

Data logging

Function	Records process data over time with real time clock.
Type ZL	Each log containing flow rate, total, acc. total, time/date stamp and log number.
Interval logs	Every: 1 min, 5 min, 10 min, 15 min, 30 min, 1 hr, 2 hr, 3 hr, 4 hr, 6 hr, 8 hr or disable. Max. 1500 interval logs.
Daily logs	Configurable time once / twice per day or disable. Max. 600 daily logs.
Event logs	When settings change (Manually/Modbus), restart / power failure, factory reset, cleared total or error event. Max. 724 event logs.
Log download	Via Modbus communication as .csv
Note	With Datalogging Type ZL, the historical day totals (last 15 previous day totals) are not available.

Short orderingcodes for standard F103 configurations

	With flow logging	Without flow logging
GRP field mount HGL enclosure with earting plate	**F103 WP** (Flow Logger / Totalizer) *F103-P-AH-CH-HGL-IB-IG-OG-PB-PX-XN-ZL-ZU-1TU*	**F103 WP** (Flow Indicator / Totalizer) *F103-P-AH-CH-HGL-IB-IG-OG-PB-PX-XN-ZU-1TU*

Orderingcode overview

		Description
Model	**F103**	**Weatherproof Flow Logger / Totalizer with linearization, analog and pulse signal outputs.**
Input	**P**	**Pulse input, e.g., coil, npn, pnp, reed-switch.**
Analog	**AH**	**Galvanically isolated, loop powered 4-20mA output.**
Commu-nication	CB	Communication RS232 - Modbus ASCII / RTU - requires XX.
	CH	**Communication RS485 - 2wire - Modbus ASCII / RTU.**
	CX	No communication, remote configuration remains possible.
Enclosures	HB	Aluminum panel mount enclosure - requires XX.
	HGC	GRP panel mount enclosure - requires XX.
	HGD	GRP field mount - Cable entry: no holes.
	HGE	GRP field mount - Cable entry: 2 x Ø 16mm & 1 x Ø 20mm.
	HGF	GRP field mount - Cable entry: 1 x Ø 22mm (⅞").
	HGG	GRP field mount - Cable entry: 2 x Ø 20mm.
	HGH	GRP field mount -Cable entry: 6 x Ø 12mm.
	HGJ	GRP field mount - Cable entry: 3 x Ø 22mm (⅞").
	HGK	GRP field mount - Flat bottom, cable entry: no holes - requires XX.
	HGQ	GRP field mount - Cable entry: 2 x Ø 16mm & 3 x Ø 12mm.
	HGL	**GRP field mount - Conduit hub entry: 2 x 1/2" with earthing plate, without conduit hub - requires XN.**
	HGT	GRP field mount - Conduit hub entry: 1 x 1/2" with earthing plate, without conduit hub - requires XN.
	HA	Aluminum field mount - Cable entry: 2 x PG9 + 1 x M20.
	HL	Aluminum field mount - Cable entry: 2 x ½"NPT.
	HM	Aluminum field mount - Cable entry: 2 x M16 + 1 x M20.
	HN	Aluminum field mount - Cable entry: 1 x M20.
	HO	Aluminum field mount - Cable entry: 2 x M20.
	HP	Aluminum field mount - Cable entry: 6 x M12.
	HT	Aluminum field mount - Cable entry: 1 x ½"NPT.
	HU	Aluminum field mount - Cable entry: 3 x ½"NPT.
	HV	Aluminum field mount - Cable entry: 4 x M20.
	HZ	Aluminum field mount - Cable entry: no holes.
	HBM	Extended Alu. field/meter mount - Cable entry: 2 x M16 + 1 x M20.
	HBO	Extended Alu. field/meter mount - Cable entry: 2 x M20.
	HBU	Extended Alu. field/meter mount - Cable entry: 3 x ½"NPT.
	HSM	Stainless steel 316L field mount - Cable entry: 2 x M16 + 1 x M20.
	HSO	Stainless steel 316L field mount - Cable entry: 2 x M20.
	HSU	Stainless steel 316L field mount - Cable entry: 3 x ½"NPT.
Additional	**IB**	**Remote control input to reset total or to lock the "clear total" button.**
	IG	**2 isolated inputs: Isolated pulse input & isolated remote control input to reset total - requires OG.**
Digital output	**OG**	**Two passive transistor outputs and one isolated solid state output - requires IG.**
	OT	Two passive transistor outputs.
Power	PD	8 - 30V DC + sensor supply - requires XX.
	PX	**Basic power supply 6 - 30V DC (no real sensor supply).**
Battery	**PB**	**Additional lithium battery powered (optional).**
Hazardous	**XN**	**Non-Incendive for use in Class I, Division 2, according CSAc-us.**
	XX	Safe area according CE.
Options	ZB	Backlight.
	ZL	Flow / data logging to survey information.
	ZX	**No options.**

The **bold** marked text contains the standard configuration matching F103 WP: F103-P-AH-CH-HGL-IB-IG-OG-PB-PX-XN-ZL-ZU-1TU

Important: specifications are subject to change without notice. Copyright: Fluidwell bv - 2024 -